THE UNIVERSITY OF BRITISH COLUMBIA

# Physics 108 Assignment # 9 SOLUTIONS:

# INDUCTANCE & CIRCUITS

Wed. 9 Mar. 2005 — finish by Wed. 16 Mar.

**1. Solenoid as an *RL* Circuit:** A long wire with net resistance $R = 120\ \Omega$ is wound onto a nonmagnetic spindle to make a solenoid whose cross-sectional area is $A = 0.02\ \text{m}^2$ and whose effective length is $\ell = 0.5$ m. (Treat the coil as an ideal, long solenoid.) Using a battery with a 1 M$\Omega$ internal resistance, a magnetic field of $B_0 = 0.6$ T has been built up inside the solenoid. At $t = 0$ the battery is shorted out and then disconnected so that the current begins to be dissipated by the coil's resistance $R$. We find that after 3.6 ms the field in the coil has fallen to 0.1 T.

($a$) How many joules of energy are stored in the coil at $t = 0$? **ANSWER**: The energy density in a magnetic field is given in general by $\dfrac{U}{V} = \dfrac{1}{2\mu_0}B^2$, so the total stored energy is $U = \dfrac{\ell A}{2\mu_0}B^2$, in this case $U_0 = \dfrac{0.5 \times 0.02 \times (0.6)^2}{2 \times 4\pi \times 10^{-7}}$, or $\boxed{U_0 = 1432.4\ \text{J}}$.

($b$) How long does it take for the stored energy to fall to half its initial value? **ANSWER**: Since $U \propto B^2$, $U \to \frac{1}{2}U_0$ when $B \to \frac{1}{\sqrt{2}}B_0$ and since $B \propto I$, this occurs when $I \to \frac{1}{\sqrt{2}}I_0$. We know that the current in an $RL$ circuit decays exponentially, so $I(t) = I_0 \exp(-t/\tau)$. We are therefore looking for the time when $I/I_0 = 1/\sqrt{2} = \exp(-t_f/\tau)$, or $t_f = \tau \ln(\sqrt{2})$. We can determine the time constant $\tau$ from the given fact that $B/B_0 = 0.1/0.6 = \exp(-3.6 \times 10^{-3}/\tau)$ or $\tau = 3.6 \times 10^{-3}/\ln 6 = 2.01 \times 10^{-3}$ s. This then gives $\boxed{t_f = 0.696 \times 10^{-3}\ \text{s}}$.

($c$) What is the total number of turns in the coil? **ANSWER**: The time constant is $\tau = L/R$. With $R = 120\ \Omega$ this gives $L = 0.241$ H (Henries). It is also true that a solenoid of this form has $L = \mu_0 n^2 A\ell = \mu_0 N^2 A/\ell$, giving $N^2 = \dfrac{\ell L}{\mu_0 A} = \dfrac{0.5 \times 0.241}{4\pi \times 10^{-7} \times 0.02} = 4.80 \times 10^6$ or $\boxed{N = 2190\ \text{turns}}$.

**2. *LC* Circuit Time-Dependence:** In an $LC$ circuit with $C = 90\ \mu$F the current is given as a function of time by $I = 3.4\cos(1800t + 1.25)$, where $t$ is in seconds and $I$ is in amperes.

($a$) How soon after $t = 0$ will the current reach its maximum value? **ANSWER**: The phase of the oscillation is $\theta = \omega t + \phi$. By inspection, $\omega = 1800\ \text{s}^{-1}$ and $\phi = 1.25$ rad. Thus $\cos\theta$ will reach its maximum *amplitude* at $\theta = \pi$, for which $t = (\pi - 1.25)/1800$ or $\boxed{t = 1.05\ \text{ms}}$. However, since this gives a maximum *negative* current, one might argue that the *maximum* (positive) current will first occur when $\theta = 2\pi$ or for $t = (2\pi - 1.25)/1800$ or $\boxed{t = 2.80\ \text{ms}}$. Either answer is acceptable.

($b$) Calculate the inductance. **ANSWER**: Since $\omega = 1/\sqrt{LC} = 1800\ \text{s}^{-1}$, $L \times (90 \times 10^{-6}\ \text{F}) = 1/(1800)^2$, giving $\boxed{L = 3.43 \times 10^{-3}\ \text{H.}}$

($c$) Find the total energy in the circuit. **ANSWER**: When $i = i_{\max} = 3.4$ A, all the energy is in the inductance $L$. Later on this gets shared back and forth with the capacitance, but the total energy never changes. Thus $U = \frac{1}{2}Li_{\max}^2 = \frac{1}{2} \times 3.43 \times 10^{-3} \times (3.4)^2$ or $\boxed{U = 0.0198\ \text{J}}$.

**3. Build Your Own Circuit:** You are given a 12 mH inductor and two capacitors of 7.0 and 3.0 $\mu$F capacitance. List all the *resonant frequencies* that can be produced by connecting these circuit elements in various combinations.

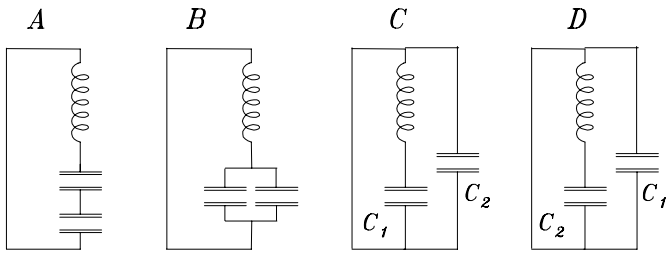


**ANSWER**: Generally only the loops with *both* an $L$ *and* a $C$ can resonate. Any "external" $C$ is just a "spectator" (consider $\sum \Delta\mathcal{E} = 0$ on the outermost loop in C or D). Thus

$$\omega_A = \left[L\left(\frac{1}{C_1}+\frac{1}{C_2}\right)^{-1}\right]^{-\frac{1}{2}} = 6299\ \mathrm{s}^{-1}; \quad \omega_C = [LC_1]^{-\frac{1}{2}} = 3450\ \mathrm{s}^{-1}$$

$$\omega_B = [L(C_1+C_2)]^{-\frac{1}{2}} = 2887\ \mathrm{s}^{-1}; \quad \omega_D = [LC_2]^{-\frac{1}{2}} = 5270\ \mathrm{s}^{-1}$$

46.316 0-20.57 0+12

**4. *LRR* Circuit Time-Dependence:** In the circuit shown, the $\mathcal{E} = 12$ V battery has negligible internal resistance, the inductance of the coil is $L = 0.12$ H and the resistances are $R_1 = 120\ \Omega$ and $R_2 = 70\ \Omega$. The switch **S** is closed for several seconds, then opened. Make a quantitatively labelled graph with an abscissa of *time* (in milliseconds) showing the *potential* of point **A** with respect to ground, just before and then for 10 ms after the opening of the switch. Show also the variation of the potential at point **B** over the same time period.

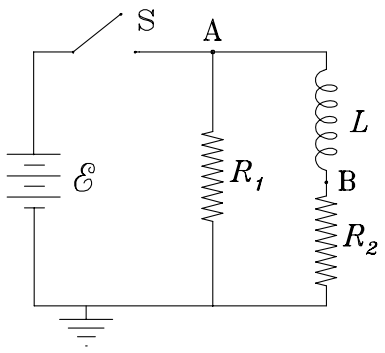

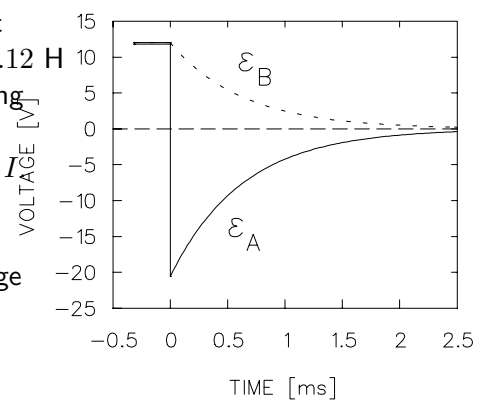
**ANSWER**: After $S$ has been closed for a long time, $dI/dt = 0$ and $L$ acts like a plain wire. Then both resistors have the same potential drop as the battery: $\mathcal{E} = I_1R_1 = I_2R_2$, giving $I_1 = 12$ V$/120\ \Omega = 0.1$ A and $I_2 = 12$ V$/70\ \Omega = 0.1714$ A. Also at that time $\mathcal{E}_A = \mathcal{E}_B = \mathcal{E} = 12$ V. When the switch opens at $t = 0$, the isolated right loop is just an $LR$ circuit with $L = 0.12$ H and $R = R_1 + R_2 = 190\ \Omega$. The current $I_2 = 0.1714$ A flowing through $L$ cannot change suddenly but that through $R_1$ immediately reverses direction and is thereafter equal to $I_2 = I$. Subsequently $I(t) = [0.1714\ \mathrm{A}]e^{-t/\tau}$ where $\tau = L/R = 0.12/190 = 4\times10^{-4}$ s. Point $A$ is at a voltage $\mathcal{E}_A = -IR_1$ with respect to ground and point $B$ is at a voltage $\mathcal{E}_B = +IR_2$ with respect to ground. These have initial values $\mathcal{E}_A(0) = 0$ V and $\mathcal{E}_B(0) = 0$ V and both decay exponentially toward zero with time constant $\tau$.